DC MegaPAC™
DC-DC Switcher

Operator's Manual

and

"Quick Install" Instructions

www.mpwrs.com

DC MegaPAC™
DC-DC Switcher

DC MegaPAC "Quick Install" Instructions

Mounting the DC MegaPAC

* The DC MegaPAC can be mounted on any of four sides.
* Use #8-32 or M4 mounting screws. Maximum penetration should not exceed 0.15" (3,8mm).
* Maintain 2" (5,1cm) clearance at either end for airflow.

Output Connections

Power Connections

Installing ring lugs and/or bus bars on output studs:

* The upper stud is Positive and the lower stud is the Return.
* Remove outer nut. **Do not remove or loosen inner nut.**
* Place ring lug over output stud.
* Replace and tighten outer nut to a maximum torque of **45 lb-in.**
  Do Not Over-Tighten Nuts.

Installing power connectors on DualPACs (J1A and J1B):

* Use Molex mating receptacle #39-01-2060 with #39-00-0039 terminals provided.
* Pins 1 and 4 are Positive, while pins 2 and 5 are the Return.
* Attach terminals to 18-24 AWG stranded wire using Molex tool #11-01-0197.

DualPAC Output Connector

J1A & J1B

Pin	
1&4	+Vout
2&5	-Vout
3	+Sense
6	-Sense

Sense Connections

Sense connections must always be made. Failure to connect Sense lines can cause failure to the unit.

Sense Connector J2:

* Sense connections do not have to be made if the Local Sense option has been ordered. (An "L" in the ConverterPAC part number means the Local Sense option has been installed; e.g. M5V/40AL.)
* Use Molex mating receptacle #50-57-9403 with #16-02-0103 terminals provided.
* J2-2 is the +Sense and J2-3 is the -Sense.
* Attach terminals to 22-24 AWG twisted pair wire using Molex tool #11-01-0208.
* Attach opposite ends of Sense lines to point where regulation is desired.
* **Verify that Sense lines are not cross-connected before applying input power.**

Sense Connector

J2

Pin	
1	Trim Pin Access
2	+Sense
3	-Sense

Sense Connections on DualPACs:

* Sense connections do not have to be made if the Local Sense option has been ordered. (An "L" in the ConverterPAC part number means the Local Sense option has been installed; e.g. D5V/20AL-12V/4.2AL.)
* Sense connections are available on the J2 connector or the J1A and J1B connectors. Either can be used.
* If using J2 connector, see instructions above for "Sense Connector J2."
* Pin 3 is the +Sense and Pin 6 is the -Sense.
* Attach terminals to 18-24 AWG twisted pair wire using Molex tool #11-01-0197.
* **Verify that Sense lines are not cross-connected before applying input power.**

DualPAC Output Connector

J1A & J1B

Pin	
1&4	+Vout
2&5	-Vout
3	+Sense
6	-Sense

Trim Pin Connection J2

* The Trim J2 connection should only be made if the Trim option has not been installed. (A "T" or an "F" in the ConverterPAC part number means the Trim option is installed; e.g. M5V/40AT.)
* Use Molex mating receptacle #50-57-9403 with #16-02-0103 terminals provided.
* J2-1 provides Trim access.

Sense Connector

J2

Pin	
1	Trim Pin Access
2	+Sense
3	-Sense

DC OK (Power Good) Connection J3

* DC OK is only available as an option and is not always present.
* J3-4 is Vcc In , J3-3 is Power Good, J3-2 is Power Good inverted, and J3-1 is Signal Ground.
* Use Molex mating receptacle #39-01-0043 with #39-00-0031 terminals provided.
* Attach terminals to 22-28 AWG stranded wire using Molex tool #57005-5000.

DC OK (Power Good)

J3	Pin	
4	J3-4	Vcc
3	J3-3	Power Good
2	J3-2	Power Good Inverted
1	J3-1	Signal Ground

Input Connections

Input Power J9

* Input DC power is applied to solderless lugs on J9 using 2 AWG wire.
* Maximum torque is 25 lb-in.
* **A fuse or circuit breaker is recommended in the input line.**

Interface Connections J10

* Use 25 pin D-sub connector provided.
* J10-8 to 11 and J10-21 to 24 are Enable/Disable for slots 1-8.
* J10-16, 17 are Vcc, J10-12 and 15 are Signal Ground, J10-18 is AC Power OK, and J10-5 is General Shutdown.

Input Connections J9

J10 INTERFACE CONNECTOR IDENTIFICATION

1 Signal Ground	14 No Connection
2 Signal Ground	15 Signal Ground
3 Overtemp. Warning	16 Vcc +5 volt, 300 mA
4 Analog Temperature	17 Vcc +5 volt, 300 mA
5 General Shutdown	18 Input Power OK
6 No Connection	19 Input Power Fail
7 No Connection	20 No Connection
8 Enable/Disable #8	21 Enable/Disable #7
9 Enable/Disable #6	22 Enable/Disable #5
10 Enable/Disable #4	23 Enable/Disable #3
11 Enable/Disable #2	24 Enable/Disable #1
12 Signal Ground	25 Gate Out Slot #8
13 Gate In Slot #1	

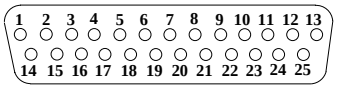

J10

Amp 25 pin connector #746862-2 plug for flat ribbon cable. Mates with housing Amp #747548-2 plus slide latch or similar.

DC MegaPAC™
DC-DC Switcher

Overview

The DC MegaPAC DC-DC switcher allows users to instantly configure high efficiency power supplies. Although small in size (3.4"H x 6.0"W x 11.7"L), (85,8mm x 153,4mm x 296,7mm), the DC MegaPAC provides up to 1600W of output power with up to 16 isolated outputs.

A complete power supply is configured by selecting and inserting up to eight slide-in output assemblies called "ConverterPACs." ConverterPACs incorporate one or two Vicor DC to DC converters and are available in a wide array of outputs and power levels. The net result is a power supply that offers the advantages of a custom supply, but is assembled from standard and modular building blocks.

The entire family of MegaPAC power supplies is completely user-configurable. If output requirements change, i.e., more power or a different output voltage is needed, upgrading is easy: simply unlock a single screw and replace the slide-in ModuPAC assembly with one that has the desired rating. For additional flexibility, ModuPACs can be connected in parallel to increase output power (booster ModuPACs), or in series for higher voltages. The driver is to the left of the boosters when looking at the output end of the supply. A user-friendly interface provides control and output sequencing capability, in addition to useful status indicators. Please consult our Applications Engineering Department if you have other special requirements.

Standard Features

- DC Input: 12 Vdc (10-20 Vdc), 24 Vdc (18-36 Vdc), 36 Vdc (21-56 Vdc), 48 Vdc (36-76 Vdc), 72 Vdc (55-100 Vdc)
- Output Power: 1600W; 1-16 outputs
- Full power output to 45°C; half power to 65°C
- Soft start for limiting inrush current
- Conducted EMI meets BTR 2511
- Output Sequencing and General Shutdown (Consult Applications Engineering for automatic sequencing circuitry.)
- Remote Sense capability and output overcurrent protection on all outputs
- Output overvoltage protection on most outputs
- Output overtemperature protection on all outputs
- Vin OK status signal
- Input over, under and reverse voltage protection
- Box-to-box paralleling capability
- Input temperature monitor, warning, and shutdown
- CE Mark, UL, CSA

Optional Features

- DC OK status signal
- Output voltage adjustment range with built-in potentiometer
- Reversed fan airflow direction
- Industrial-grade screening of output converters
- Hardwired Local Sense

Technical Description

The DC MegaPAC chassis consists of an EMI filter, cooling fan, customer interface and associated housekeeping circuits. Input DC voltage (+VIN, -VIN, and GND) is applied to the input connectors. The input current is passed through an EMI filter designed to meet conducted British Telecom specifications. At start-up, inrush current is limited by a thermistor. The thermistor is shunted out shortly after initial power-up by a relay driven by a DC bus voltage sense circuit. The DC voltage is then fed to the backplane. The backplane supplies power to a variety of ConverterPAC assemblies that provide the desired low voltage, regulated outputs.

Voltage conversion in the output assemblies is achieved by Vicor's family of Zero-Current-Switching (ZCS) DC-DC converters. These are forward converters in which the main switching element switches at zero current. This patented topology has a number of unique attributes: low switching losses; high frequency operation resulting in reduced size for magnetics and capacitors; excellent line and load regulation; wide adjustment range for output; low EMI/RFI emission and high efficiencies.

At initial power-up, the DC MegaPAC outputs are disabled to limit the inrush current and to allow the DC bus potential to charge to the operating level. A low-power flyback converter operating with PWM current-mode control converts the DC bus into regulated low voltage to power the internal housekeeping circuits and DC cooling fan. When operating on 48 Vdc, the internal housekeeping Vcc comes up within 3s after the application of input power. Once the input range is within specification, the VIN OK signal asserts to a TTL "1" indicating the input power is OK, and allows the power outputs to be enabled. The power outputs will be in regulation 500 ms after the Vin OK signal asserts to a TTL "1." An auxiliary Vcc output of 5 Vdc sourcing up to 0.3A is provided for peripheral use.

An output Enable/Disable function is provided by using an optocoupler to control the Gate In pins of the ConverterPAC assemblies. If the Enable/Disable control pin is pulled low, the optocoupler turns on, pulling the Gate In pin low and disabling the ConverterPAC output. The nominal delay associated for an output to come up when measured from release of the Enable/Disable pin is 5-10 ms. The General Shutdown function controls all outputs simultaneously and works in a similar manner. If driven from an electromechanical switch or relay, a capacitor should be connected to eliminate the effects of switch bounce.

There is no ride-through (holdup) time available with the DC MegaPAC.

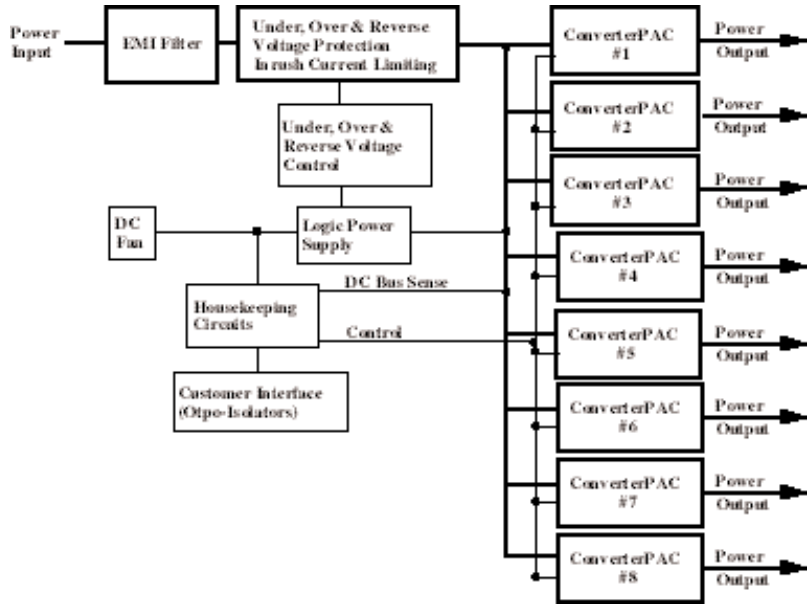

Figure 1. DC MegaPAC Architecture

ConverterPAC Functional Description

ConverterPACs are the family of slide-in output assemblies used in MegaPAC power supplies. ConverterPACs are interchangeable within a MegaPAC so they can be added, moved, or changed as necessary. They are also interchangeable between different AC input MegaPAC chassis. A ConverterPAC removed from a Mini MegaPAC could be used in a 3 Phase MegaPAC, for example. ConverterPACs can be selected with a variety of options and in voltages from 2 to 95 Vdc.

ModuPAC

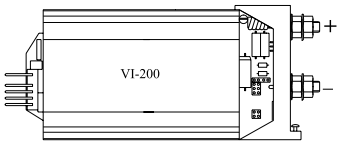

Figure 2. ModuPAC

The ModuPAC output assembly consists of a VI-200 DC to DC converter that converts the high voltage bus to the desired regulated output voltage. Each ModuPAC can provide up to 200 watts of power. Multiple ModuPACs can be paralleled in a driver-booster configuration to provide more power. ModuPACs are fused with a PC-Tron, DC-rated, fast-acting fuse. A passive LC filter is used to reduce output ripple/noise down to 1% typical, and 2% maximum peak-to-peak from 10% to 100% of rated load. An optional DC Power Good signal, or output voltage Trim potentiometer can be specified. The ModuPAC contains overvoltage protection (OVP), overcurrent protection (OCP), and overtemperature protection (OTP). The OCP has automatic recovery when the overcurrent condition is removed. The OVP and OTP are latching functions and require recycling of the AC input power to restart.

DualPAC

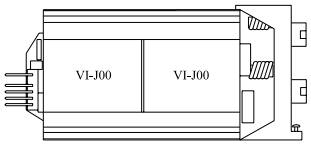

Figure 3. DualPAC

This output assembly consists of two VI-J00 DC to DC converters that convert the high voltage bus to the desired regulated output voltages. Each output on a DualPAC can provide up to 100 watts of power and is fused with a single PC-Tron, DC-rated, fast-acting fuse. A passive LC filter is used to reduce output ripple/noise down to 1% typical, and 2% maximum peak-to-peak from 10% to 100% of rated load. An optional output voltage Trim potentiometer can be specified. DC Power Good signal is not available. The DualPAC contains overcurrent protection, which recovers automatically when the overcurrent condition is removed. **Overvoltage and overtemperature protection are not available.**

JuniorPAC

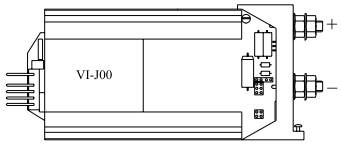

Figure 4. JuniorPAC

The JuniorPAC consists of one VI-J00 DC to DC converter that converts the high voltage bus to the desired regulated output voltage. JuniorPACs can provide up to 100 watts of output power and are fused with a single PC-Tron, DC-rated, fast-acting fuse. A passive LC filter is used to reduce output ripple/noise down to 1% typical, and 2% maximum peak-to-peak from 10% to 100% of rated load. An optional DC Power Good signal or output voltage Trim potentiometer can be specified. The JuniorPAC contains output overcurrent protection, which recovers automatically when the overcurrent condition is removed. Overvoltage and overtemperature protection are not available.

RAMPAC

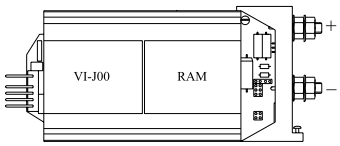

Figure 5. RAMPAC

This output assembly consists of a VI-J00 DC to DC converter with a Ripple Attenuator Module (RAM) and is designed for applications requiring low output ripple/noise. The RAMPAC can attenuate the ripple/noise down to 10 mV peak-to-peak over a 20 MHz bandwidth from 10% to 100% of rated load of the converter. Each RAMPAC can provide up to 100 watts of output power, and outputs from 5V to 50V are available. An optional DC Power Good signal or output voltage Trim potentiometer can be specified. The RAMPAC contains output overcurrent protection, which recovers automatically when the overcurrent condition is removed. Overvoltage and overtemperature protection are not available.

Configuring and Reconfiguring MegaPACs

ConverterPACs can be easily added, replaced, or moved by sliding the assemblies in or out of a MegaPAC chassis. Most ConverterPACs are driver ModuPACs and can be inserted into any available slot. For outputs greater than 200 watts, a driver ModuPAC and one or more booster ModuPACs will be used. Arrays of drivers and boosters

should be configured so all boosters are placed in the slots to the immediate right of the driver when looking at the output end of the MegaPAC.

Prior to removing or installing ConverterPACs, you must remove power from the MegaPAC and wait 5 minutes. Failure to do so can result in personal injury or damage to the supply.

Take standard ESD precautions when handling ConverterPACs.

Removing ConverterPACs
ConverterPACs can be removed by loosening the captive screw at the base. Once this screw has been loosened, the ConverterPAC will slide out of the chassis. **Once a ConverterPAC has been removed, the empty slot MUST be filled with either another ConverterPAC or an airblock.** If the slot is left empty, it will provide an airflow escape, significantly degrade thermal performance, and can cause failure.

ConverterPAC Feature Summary

ConverterPAC	OVP	OCP	OTP	RS	LS	PG	TrimPot
ModuPAC	Std	Std	Std	Std	Opt	Opt	Opt
DualPAC	N/A	Std	N/A	Std	Opt	N/A	Opt
JuniorPAC	N/A	Std	N/A	Std	Opt	Opt	Opt
RAMPAC	N/A	Std	N/A	Std	Opt	Opt	Opt

OVP	Overvoltage Protection (latching)	RS	Remote Sense
OCP	Overcurrent Protection (auto-recovery)	LS	Local Sense
OTP	Overtemperature Protection (latching)	PG	Power Good (DC OK)

Table 1. Summary of ConverterPAC Features

Installing ConverterPACs as Drivers
ConverterPACs can be installed in empty slots by simply sliding in the new ConverterPAC and securing the screw at the base. Power and interface connections can be made after the ConverterPAC has been installed.

Installing Booster ModuPACs to Increase Output Power
ConverterPACs can be paralleled for more power. Additional power to an output is obtained by connecting one or more boosters in parallel with a single driver. The driver can be placed in any open slot. All boosters should be inserted in the slots to the immediate right of the driver as viewed from the output end of the MegaPAC. Figure 6 shows a driver placed in slot #1 and 3 boosters placed in slot #s 2 to 4. After inserting the driver and boosters, they are paralleled using bus bars across the positive and negative output studs. Drivers should not be paralleled with each other. For help in identifying boosters and drivers, refer to the section on MegaPAC Part Numbers.

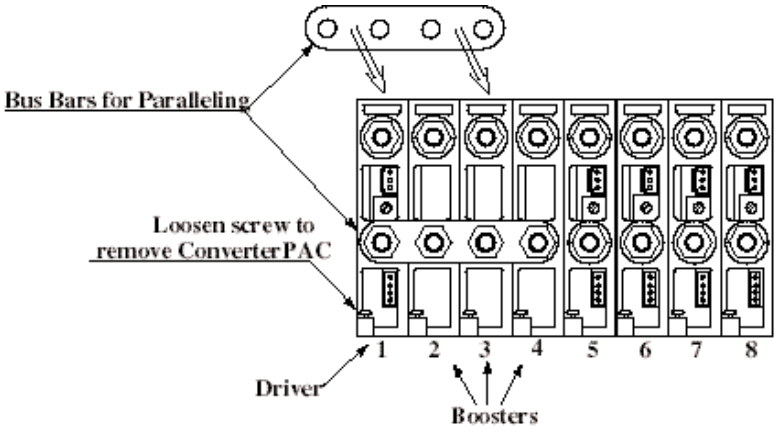

Figure 6. Paralleling ConverterPACs

Interface Connections

Chassis Input Power Terminals (J9)
Input DC power is applied to solderless lugs J9, using a wire size of 2 AWG. J9-1 is the +DC Voltage IN connection, and J9-3 is the -DC Voltage IN connection. The Earth Ground is accessed via J9-2, a size 10-32 self-locking PEM nut. Maximum torque recommended is 25 lb-in. A fault clearing device, such as a fuse or circuit breaker at the power supply input is strongly recommended. For an output of 1600 watts with operation on 48 Vdc (and low line operation of 42 volts), a fast-blow fuse of 50 amps is recommended. Start-up inrush current is limited by a thermistor, and in most cases, will be less than nominal line current during operation. Start-up inrush current can be calculated by I = MaxVin/10 (where Max Vin is the maximum operating voltage. See Table 2.). Example: for a nominal 48V input, the maximum operating voltage is 68; therefore, I = 68V/10 = 6.8 amps.

Note: A fault clearing device, such as a fuse or circuit breaker at the power supply input is required per safety agency conditions of acceptability.

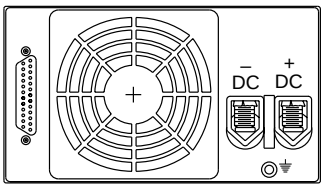

Figure 7. Input Panel Connectors

Output Power Connections (+P, -P for Single Output, or J1A/J1B for Dual Outputs)
For single output ConverterPACs, these terminals are two 1/4-20 plated steel studs. The upper stud is positive with respect to the lower stud. For dual output ConverterPACs, there is a 6-pin Molex connector for each output. J1A pins 1 and 4 are the +Output, and J1A pins 2 and 5 are the -Output. Pins 3 and 6 are duplicates of the Remote Sense terminals present on J2A and J2B. Use appropriate wire size rated to handle the full output current, including short circuit levels. Avoid large current loops in output cables; run power and return cables next to one another to minimize inductive effects. All outputs are isolated and can provide positive or negative outputs.

Output +/-Sense Connections (J2 for Single Output, or J2A/J2B for Dual Outputs)
Although all outputs are open-Sense protected, the +/-Sense terminals **MUST** be connected to their respective outputs before the DC MegaPAC is powered up. Regardless of the output polarity configured, the +Sense should always connect to the +Power output. The -Sense connects to the -Power output. Sense connections are not required on booster ConverterPACs, BatPACs, or if the Local Sense option is specified. Sense pins can be accessed on J1A/J1B or J2A/J2B on dual output units.

Signal Ground (J10-1, 2, 12, 15)
Signal Ground (Connector Pin Identification on page 14) is an isolated ground reference for all J10 interfacing signals, and can be used for ConverterPAC output status signals such as Power Good. This is not the same as Earth Ground on input power connector J9.

Enable/Disable (J10-8 to J10-11, and J10-21 through 24)
The Enable/Disable control pins allow ConverterPAC outputs to be sequenced either on or off. For the DC MegaPAC, J10-8 through 11 and J10-21 through 24 are the control pins for output positions 1 through 8. For DualPACs, both outputs are sequenced. In parallel arrays, only the driver ConverterPAC need be controlled. The Enable/Disable pins should be pulled low to less than 0.7V with respect to Signal Ground to disable the outputs. They will sink 10 mA maximum. These pins should be open circuited or allowed to exceed 4.5V when enabled. Do not apply more than 6V to these inputs at any time. If driven from an electromechanical switch or relay, a capacitor should be connected to eliminate the effects of switch bounce.

J10 INTERFACE CONNECTOR IDENTIFICATION

1 Signal Ground	14 No Connection
2 Signal Ground	15 Signal Ground
3 Overtemp. Warning	16 Vcc +5 volt, 300 mA
4 Analog Temperature	17 Vcc +5 volt, 300 mA
5 General Shutdown	18 Input Power OK
6 No Connection	19 Input Power Fail
7 No Connection	20 No Connection
8 Enable/Disable #8	21 Enable/Disable #7
9 Enable/Disable #6	22 Enable/Disable #5
10 Enable/Disable #4	23 Enable/Disable #3
11 Enable/Disable #2	24 Enable/Disable #1
12 Signal Ground	25 Gate Out Slot #8
13 Gate In Slot #1	

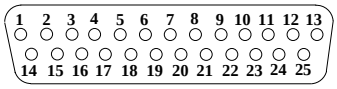

Amp 25 pin connector #746862-2 plug for flat ribbon cable. Mates with housing Amp #747548-2 plus slide latch or similar.

Figure 8. Interface Connector

General Shutdown /GSD (J10-5)

The GSD control pin on J10-5 allows simultaneous shutdown of all ConverterPAC outputs (see Connector Pin Identification on page 14). This pin must be pulled down to less than 0.7V, and will sink 10 mA maximum to shut down all outputs. The GSD pin should be open circuited or allowed to exceed 4.5V when not in use, or when the outputs are to be enabled. Do not apply more than 6V to this input at any time. Normal open circuit voltage is 1.5 to 3V with respect to Signal Ground. If driven from an electromechanical switch or relay, a capacitor should be connected to eliminate the effects of switch bounce.

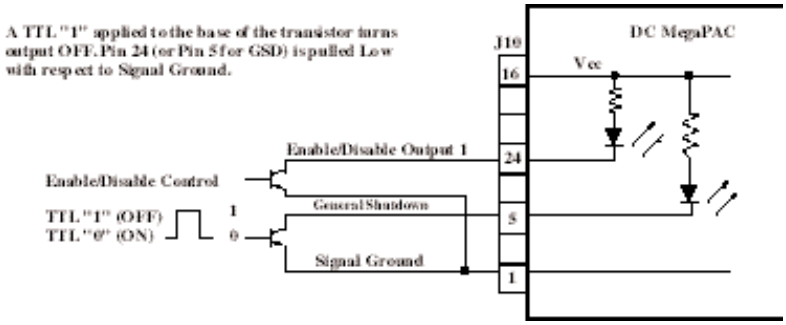

Figure 9. Enable/Disable and General Shutdown

Input Power OK (J10-18)

This is an active high TTL compatible signal and provides a status indication of the DC input power (see Table 2 and Connector Pin Identification on page 14). It is capable of sinking 20 mA maximum. This signal switches to a TTL "1" when Vin is within its specified range.

	Operating Range			Vin OK Trigger	
Code	Nominal Vdc	Low Line	High Line	Low Line Cut Off	High Line Cut Off
0	12 volts	10 volts	20 volts	6V to 10V	20V to 23V
1	24 volts	21 volts	32 volts	16V to 21V	32V to 36V
W	24W volts	18 volts	36 volts	12V to 18V	36V to 41V
2	36 volts	21 volts	56 volts	11V to 21V	56V to 63V
3	48 volts	42 volts	60 volts	34V to 42V	60V to 68V
N	48W volts	36 volts	76 volts	23V to 36V	76V to 86V
4	72 volts	55 volts	100 volts	40V to 55V	100V to 111V*

*Do not apply greater than 100 volts to the input of the DC MegaPAC.

Table 2. Input Voltage Range & Vin OK Limits

Input Power Fail (J10-19)
The Input Power Fail signal on pin J10-19 is the inverse of the Input Power OK signal on J10-18, and goes to a TTL "0" when the input DC power is OK. It is capable of sinking 20 mA maximum.

Overtemperature Warning (J10-3)
J10-3 is a signal that asserts a TTL level "1" if the air temperature exceeds the following factory set levels. The warning trip point is 65°C to 76°C, typically, and recovery point is 60°C to 71°C, typically.

Overtemperature Shutdown
If the inlet ambient air temperature exceeds the following factory set levels, the outputs are disabled. The shutdown trip point is 70°C to 81°C, typically, and recovery point is 40°C to 48°C, typically.

Analog Temperature Monitor (10-4)
This signal on J10-4, referenced to Signal Ground, provides an analog DC voltage output between 0V and 10V that represents the air temperature of 0°C to 100°C, respectively, inside the power supply. The inlet air temperataure is monitored close to the fan.

Gate IN/Gate OUT (J10-13, 25)
The Gate IN and Gate OUT signals are used for paralleling DC MegaPACs for power expansion. The Gate OUT signal, J10-25, of the driver DC MegaPAC should be connected to the Gate IN, J10-13, of the Booster DC MegaPAC; J10 signal ground of the driver DC MegaPAC also needs to be connected to J10 signal ground of the booster DC MegaPAC.

The driver DC MegaPAC (ModuPAC, slot #8) generates the Gate OUT signal and sends it to the booster DC MegaPAC (ModuPAC, slot #1). Vicor's zero-current-switching booster technology provides for accurate, dynamic power sharing within arrays, without the need for trimming, module "matching" or external components.

Auxiliary Vcc +5V/0.3A (J10-16, 17)
The Vcc on J10-16 and J10-17 is an auxiliary 5V regulated power source (see Figure 10 and Connector Pin Identification on page 14). It is +5 Vdc (± 5%) with respect to Signal Ground, and can supply 300 mA maximum. It is short-circuit-proof, but if shorted, all outputs will shut down through the Enable/Disable circuitry. The Auxiliary Vcc typically powers user circuitry or is used with the Power Good circuitry to provide a pull-up reference for the outputs of the DC Power Good circuit on a ModuPAC. If used for this purpose, a Signal Ground on J10 must also be connected to the J3-1 Signal Ground pin of the ModuPAC.

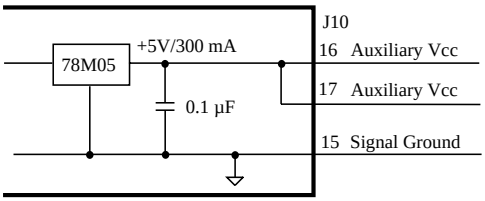

Figure 10. Auxiliary Vcc

Power Good (J3-3)
The optional Power Good signal on J3-3 is referenced to Signal Ground on J3-1, and indicates the status of the output voltage. This signal is asserted a TTL "1" when the output voltage is above 95% of nominal. It is a TTL "0" when the output voltage is below 85% of nominal.

If the Trim option is also used, the Power Good trip points DO NOT track with the trimmed voltage. It is possible to trim the output below the fixed setpoints of the Power Good circuit and cause a negative Power Good signal.

Power Good Inverted (J3-2)
This is the inverse of the Power Good signal and is referenced to Signal Ground on J3-1.

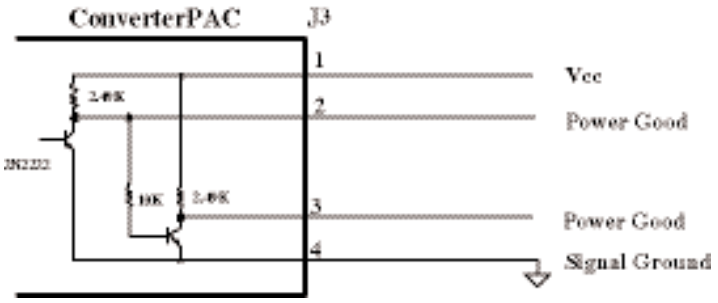

Figure 11. Power Good and Vcc

Signal Ground (J3-1)
Signal Ground on J3-1 is an isolated secondary ground reference for J3 status signals. It is used to provide a reference point for the Power Good circuitry and is not the same as Earth Ground on input power connector J9.

Vcc In (J3-4)
The Vcc In on J3-4 is an input that requires +5V either from the J10 Auxiliary Vcc, or from another source. Input current to this pin is limited by an internal resistor to 3 mA. If the J10 Auxiliary Vcc is connected to Vcc In on J3-4, then at least one J10 Signal Ground must be connected to Signal Ground on J3-1.

+Sense/–Sense (J2-2 and J2-3)
The +Sense on J2-2 should be connected to the +Power Out, and the –Sense on J2-3 to the –Power Out terminal. **Do not reverse or leave the Sense pins open**. Sense pins can be terminated locally at the output of the power supply, in which case the power supply will provide regulation at the output terminals. The voltage appearing at the load may drop slightly due to voltage drop in the power cables. If it is necessary to compensate for voltage drop along the output power cables, this termination should be made close to the output load. Compensation of up to 0.5V (0.25V per lead) can be obtained. Use twisted pair 22-24 AWG wire for this purpose.

For DualPACs, the +Sense pins are available on connectors designated as J2A-2 and J2B-2 for outputs A and B, respectively. –Sense pins are on J2A-3 and J2B-3, respectively. These pins are also duplicated on the power connectors J1A and J1B.

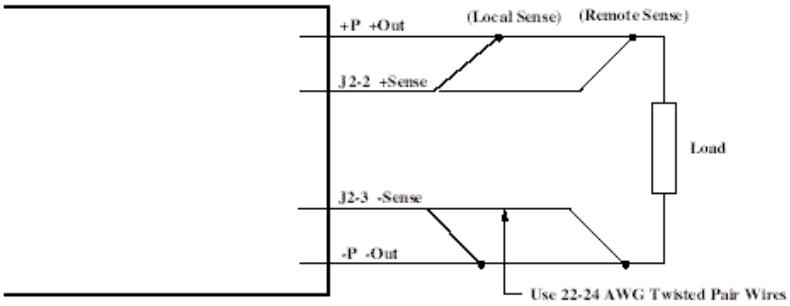

Figure 12. Sense Leads

External Trim (J2-1)
Output voltage can be trimmed using an optional factory-installed Trim potentiometer or with the Trim pin (see Figure 13). The Trim potentiometer is located on the ConverterPAC. If the Trim potentiometer has not been ordered, the Trim pin must be used. When using the Trim pin, the Trim limits are determined by the DC/DC converter used on the ConverterPAC. Maximum Trim ranges are 10% above the nominal converter voltage and 50% below the nominal converter voltage.

The Trim pin on J2 can be used to control the output voltage. It is referenced to the -Sense pin on J2 and can be controlled by either a resistor network or an external voltage source. To increase an output voltage above its nominal, it is necessary to increase the voltage at the Trim pin above the internal reference voltage (Vref). The reverse is true to decrease an output voltage.

Note: Converters are sometimes pretrimmed at the factory if a nonstandard output voltage is requested. Standard voltages include 2V, 3.3V, 5V, 12V, 15V, 24V, 28V, and 48V. If using a nonstandard voltage, or if a ConverterPAC is ordered with a Trim option, the resistor calculations will differ from those below. Please consult the factory for assistance.

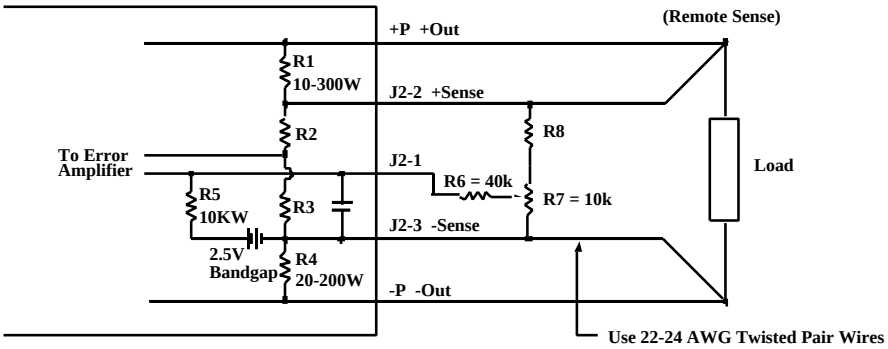

Figure 13. External Trim

OUTPUT MODULE	V_{ref}	R_{TH}
VI-200/VI-J00 ≥3.3V	2.50V	10.0 kΩ
VI-200/VI-J00 <3.3V	0.97V	3.88kΩ

Table 3. Module Internal Reference Voltages and Thevenin Resistances.

Example:
±10% Trim adjust on a 12V nominal output.

Figure 13 shows a typical variable Trim circuit. Using a 10k trimpot (R7), the resistor values for R6 and R8 can be calculated as follows:

$V_1 = V_{ref} + 10\% = 2.75V$ Given: $V_{ref} = 2.5V$ (see Table 3)

$I_{R5} = (2.75V - V_{ref})/R_{TH} = (2.75V - 2.5V)/10k\Omega = 25\mu A$

Setting the bottom limit:

$V_{R6} = 2.5V - 10\% = 2.25V$

And since $I_{R5} = I_{R6} = 25\mu A$,

$R6 = V_{R6}/I_{R6} = 2.25V/25\mu A = \underline{90k\Omega\sigma}$

$V_2 = V_1 + V_{R6} = 2.75V + 2.25V = 5V$

$I_{R7} = V_2/R7 = 5V/10k\Omega = 500\mu A$

$I_{R8} = I_{R7} + I_{R6} = 525\mu A$

$V_{R8} = (V_{nom} + 10\%) - V_2 = 13.2V - 5V = 8.2V$ Given: $V_{nom} = 12V$

$R8 = V_{R8}/I_{R8} = 8.2V/525\mu A = \underline{15.62k\Omega}$

Using the above resistor combination, a 12V output can be trimmed externally up to 13.2V and down to 10.8V. For further information on external trimming, refer to Chapter 5 of the Applications Manual or consult the factory for assistance.

CONSULT APPLICATIONS ENGINEERING WHEN TRIMMING OUTPUTS BELOW 5V.

Mechanical Considerations

The DC MegaPAC can be mounted on any of four surfaces using standard 8-32/M4 screws. The chassis comes with four mounting points on each surface; maximum allowable torque is 20 lb-in. The maximum penetration is 0.15 in. (3,8mm).

When selecting a mounting location and orientation, the unit should be positioned so air flow is not restricted. Maintain a 2" (5,1cm) minimum clearance at both ends of the DC MegaPAC and route all cables so airflow is not obstructed. The standard unit draws air in at the fan side and exhausts air out the load side. If airflow ducting is used, avoid sharp turns that could create back pressure. The fan moves approximately 30 CFM of air.

Avoid excessive bending of output power cables after they are connected to the DC MegaPAC. For high-current inputs and outputs, use cable ties to support heavy cables, minimizing mechanical stress on output studs. Be careful not to short-out to neighboring output studs. The DC MegaPAC is supplied with serrated, flanged hex-nuts on all output studs, so Loc-tite® or lock washers are not required. The maximum torque recommended on flanged nuts is 45 lb-in. Never loosen the inner nut on a ConverterPAC. This nut supports the hardware inside the ConverterPAC and is factory torqued.

Avoid applications in which the unit is exposed to excessive shock or vibration levels. In such applications, a shock absorption mounting design is required.

MegaPAC Do's and Don'ts

- **Do not leave ConverterPAC Sense lines open. Always terminate them locally or at the load. Use twisted pair 22-24 AWG wire.**
- **Always fill all output slots of the MegaPAC. If a slot is not filled with a ConverterPAC, it should be filled with an airblock. Failure to do so can result in overheating and damage to the power supply.**
- **Do not unplug ConverterPACs while input power is applied. They are not designed for hot-plug applications.**
- Do not restrict airflow to the unit. The cooling fan draws air into the unit and forces it out at the output power terminals.
- For power expansion use booster ConverterPACs. Viewing the unit from the output terminal side, always insert boosters to the right side of the driver.
- Run the output (+/–) power cables next to each other to minimize inductance.
- Wait 5 minutes after shutting off power before inserting or removing ConverterPACs.
- Do not attempt to repair or modify the power supply in any manner other than the exchange of ConverterPACs as described in this manual.
- Insert proper fault protection at power supply input terminals (i.e., a fuse).
- Use proper size wires to avoid overheating and excessive voltage drop.
- Never loosen the inner nut on a ConverterPAC.
- Verify output nuts are tight before powering up.

ConverterPAC Output and Connector Location and Connector Pin Identification

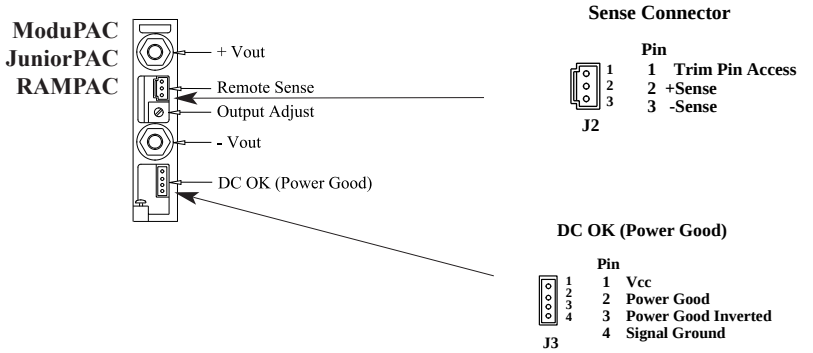

Molex #50-57-9403 housing, using #16-02-0103 terminals and 22-24 AWG stranded wire. Use Molex tool #11-01-0208.

Molex #39-01-043 housing using #39-00-0031 terminals and 22-28 AWG stranded wire. Use Molex tool #57005-5000.

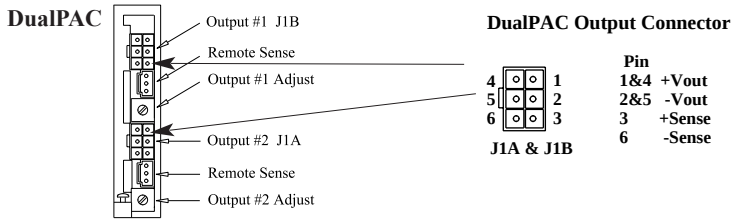

Molex #39-01-2060 housing with #39-00-0039 terminals and 18-24AWG stranded wire. Use Molex tool #11-01-0197.

DC MegaPAC Mechanical Drawings

J10 INTERFACE CONNECTOR IDENTIFICATION

1 Signal Ground	14 No Connection
2 Signal Ground	15 Signal Ground
3 Overtemp. Warning	16 Vcc +5 volt, 300 mA
4 Analog Temperature	17 Vcc +5 volt, 300 mA
5 General Shutdown	18 Input Power OK
6 No Connection	19 Input Power Fail
7 No Connection	20 No Connection
8 Enable/Disable #8	21 Enable/Disable #7
9 Enable/Disable #6	22 Enable/Disable #5
10 Enable/Disable #4	23 Enable/Disable #3
11 Enable/Disable #2	24 Enable/Disable #1
12 Signal Ground	25 Gate Out Slot #8
13 Gate In Slot #1	

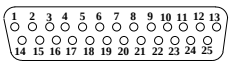

Amp 25 pin connector #746862-2 plug for flat ribbon cable. Mates with housing Amp #747548-2 plus slide latch or similar.

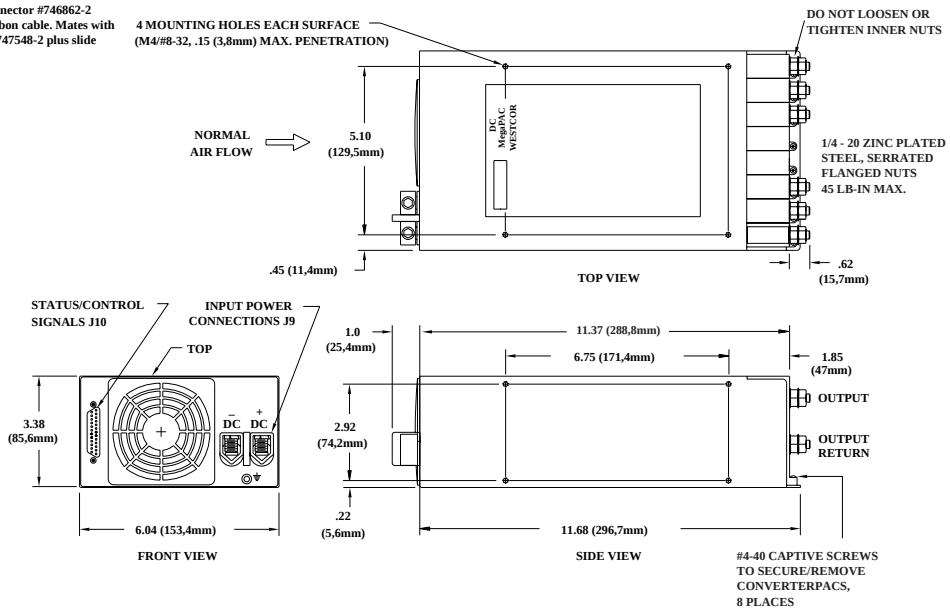

Specifications

Input Characteristics

Input Voltage	12 Vdc (10-20), 24 Vdc (18-36), 36 Vdc (21-56), 48 Vdc (36-76), 72 Vdc (55-100)
Power Factor	1.0
Line Regulation	0.2% max. from 10% to full load
Inrush Current	5A peak @ 48 Vdc input
Conducted EMI	BTR 2511 Issue 4
Transient Surge	EN/IEC 1000-4-2 Level 4

Output Characteristics

Load Regulation	0.2% max. from 10% to 100% load 0.5% max. from 0% to 10% load
Setpoint Accuracy	1% for standard voltages 2% for special or adjustable voltages
Ripple and Noise	Std. outputs: 2% or 100 mV p-p max., whichever is greater, 10% min. load VXI options (≤24V outputs): 50 mV p-p max for outputs ≤15 Vdc; 150 mV p-p max. for 24 Vdc outputs QPAC, DualQPAC, JuniorPAC, RAMPAC: <10mV p-p max.
Overcurrent Protection	105-130% > 5V outputs & DualPACs, JuniorPACs, RAMPACs, DualQPACS, JuniorQPACs 30-125% ≤ 5V outputs
Overvoltage Protection	ModuPACs and QPACs: 115-135% N/A to DualPACs, JuniorPACs, BatPACs, RAMPACs, DualQPACs and JuniorQPACs
Efficiency	83% typical
Output Power	1600W @ 45°C (Output power dependent upon Input voltage)

Environmental Characteristics

Storage Temperature	-40°C to +65°C
Operating Temperature	C-grade: 0°C to +45°C full power, 0°C to +65°C half power I-grade: -20°C to +45°C, -20°C to +65°C half power See temperature derating curves.
Safety Approvals	UL 1950 (2nd), CSA C22.2 No. 234, IEC 950, EN 60 950
Product Weights	9.25 lbs (4,2 kg) fully configured 0.7 s (0,32 kg) ConverterPAC
Warranty	1 year
Humidity	0-95% noncondensing
Altitude	15,000 feet maximum. Derates linearly.

DC MegaPAC Part Numbering

DC MegaPAC	MDx_A-x_Cx_Bxxx eg. MD2-N8103	x_A	Number of outputs
		x_B	Number of modules
		xxx	Assigned by Mission Power Solutions
		x_C	DC input voltage range
		0	12 Vdc input (10-20V range)
		1	24 Vdc input (21-32V range)
		W	24 Vdc input (18-36V range)
		2	36 Vdc input (21-56V range)
		3	48 Vdc input (42-60V range)
		N	48 Vdc input (36-76V range)
		4	72 Vdc input (55-100V range)
ConverterPAC	x_CXx_DV/x_EAx_F eg. 3M15V/10A NM15V/10ADFIL D15V/6.7A-12V/8.3AT	X	ConverterPAC type M - ModuPAC L - QPAC (VI-200) D - DualPAC U - UniPAC J - JuniorPAC XL - QPAC (VI-900) R - RAMPAC LD - DualQPAC (VI-J00) B - BatPAC
		x_C	DC input voltage range (only used for DC MegaPAC ConverterPACs)
		0	12 Vdc input (10-20V range)
		1	24 Vdc input (21-32V range)
		W	24 Vdc input (18-36V range)
		2	36 Vdc input (21-56V range)
		3	48 Vdc input (42-60V range)
		N	48 Vdc input (36-76V range)
		4	72 Vdc input (55-100V range)
		x_D	Voltage out
		x_E	Current out (rounded to 1 decimal point)
		x_F	Options (See below*). Can be multiple options.

ConverterPAC Options

B	*Booster module*	*M*	*Military Grade module*
D	*DC OK or Power Good (N/A on DualPAC)*	*R*	*RAM external*
F	*Full 50-110% output adjustment*	*S*	*Trimpot removed for external BatPAC adjustment*
F1	*50-107.5% output adjustment*	*T*	*90-110% output adjustment*
F2	*50-105% output adjustment*	*T1*	*90-107.5% output adjustment*
F3	*50-102.5% output adjustment*	*T2*	*90-105% output adjustment*
F4	*50-100% output adjustment*	*T3*	*90-102.5% output adjustment*
F5	*60-110% output adjustment*	*T4*	*90-100% output adjustment*
F6	*70-110% output adjustment*	*T5*	*100-105% output adjustment*
F7	*80-110% output adjustment*	*T6*	*100-110% output adjustment*
F8	*90-110% output adjustment*	*V1*	*"VXI" low noise (150 mV or less) for 24V outputs*
F9	*100-110% output adjustment*	*V2*	*"VXI" low noise (50 mV or less) for outputs < 24V*
I	*Industrial Grade module*	*V3*	*1% ripple or less for outputs >24V*
K	*Custom SRF module used*	*Z*	*Other special feature*
L	*Local Sense*		

Notes

Vicor Corporation, Corp. Headquarters
25 Frontage Road
Andover, MA 01810
Tel: 800-735-6200, 978-470-2900
Fax: 978-475-6715

Vicor Corporation
377 E. Butterfield Road
Suite 201
Lombard, IL 60148
Tel: 630-769-8780
Fax: 630-769-8782

Westcor Division
560 Oakmead Parkway
Sunnyvale, CA 94085
Tel: 408-522-5280
Fax: 408-774-5555

Vicor France
Tel: 33-1-3452-1830
Free Phone *France Only*:
0800 419 419
Fax: 33-1-3452-2830

Vicor Germany
Tel: +49-89-962439-0
Free Phone *Germany Only*:
0130 18 29 18
Fax: +49-89-962439-39

Vicor Hong Kong
Tel: +852-2956-1782
Fax: +852-2956-0782

Vicor Italy
Tel: +39-02-2247-2326
Free Phone *Italy Only:*
167-899-677
Fax: +39-02-2247-3166

Vicor Japan Co., Ltd.
Tel: 81-3-5487-3880
Fax: 81-3-5487-3885

Vicor U.K.
Tel: +44-1276-678-222
Free Phone *UK Only:*
0800-980-8427
Fax: +44-1276-681-269

Mission Power Solutions Inc
4168 Avenida de la Plata, # 105
Oceanside, CA 92056-6030
Tel: (760) 631-6846
Fax: (760) 631-6972

For more information about this or other Vicor products, or for assistance with component-based power system design, contact the Vicor office nearest you. Vicor's comprehensive line of power solutions includes modular, high-density DC-DC converters and accessory components, configurable power supplies, and custom power systems.

MISSION
POWER SOLUTIONS

www.mpwrs.com