AcBel Product Specification

Acbel Part No.	DC9007-BK0G
Model Name	MV24-28-600-B
Description	DC-DC Converter 24Vdc Input, 28Vdc Output, 600W Output Power, ON/OFF control refer to Fig.4
Revision	Draft Rev 5.2
Date Issued	12/19/2011

High Output Power, High Efficiency Full Brick, DC9007-BK0G MV24-28-600-B

Module: 18Vdc to 30Vdc Input, 28Vdc Output, Output Power Up to 600W, Independent Auxiliary Power.

World's Most Advanced High Power Density DC-DC Converters.

DESCRIPTION:

MegaVerter MV24-28 modules are high power density and high efficiency DC-DC converters designed for uses in telecom and other centralized modular and distributed power applications. All use metal baseplates, planar transformers, and surface mount construction to produce up to 600W maximum.

OPTIONS

- Remote On/Off Logic Configuration, Refer to Figure 4

FEATURES:

- Miniature Size:116.8mm x 61mm x 12.7mm (4.59in. x 2.40in. x 0.50in.)
- High Power Density: Up to 109.29W/in.^3
- High Efficiency: 94.2% Typical (28Vout),
- Low Output Noise
- Industry-Standard Size
- Metal Baseplate
- Thermal Protection
- Input Over/Under Voltage Protection
- Output Over Protection: Latch mode
- Output Under Voltage Protection: Hiccup Mode
- Current Limit Protection: Power Limit / Hiccup Mode
- Short Circuit Protection: Hiccup Mode
- Adjustable Output Voltage: 14V to 32V
- Remote Sense
- Independent Auxiliary Power: 8-12V, Io<=50mA
- I.O.G. (DC Good): Open Collector Output
- Remote ON/OFF Control
- Communication: CAN BUS 2.0B
- RoHS Compliant

SPECIFICATIONS:

ABSOLUTE MAXIMUM RATINGS

PARAMETER	MIN	TYP	MAX	UNITS	CONDITIONS
Input Voltage (+In to –In)	-0.3		50	V	<100ms, Output shutdown
	-0.3		40	V	Continuous, Output shut-down
Logic ON/OFF Voltage (+ON/OFF to –ON/OFF)	-0.3		5	V	
Storage Temperature	-40		125	degC	
Storage Humidity	5		95	%	Non condensing
Operating Temperature	-40		100	degC	Temperature measure shall be taken from the base-plate (Tb).
Operating Humidity	5		95	%	

INPUT SPECIFICATIONS:

PARAMETER	MIN	TYP	MAX	UNITS	CONDITIONS
Operation Input Voltage (Vi)	18		30	V	
Maximum Input Current (Ii,max)			38	A	Vi=18V, Io =Io,max
Inrush Transient			2	A^2s	
Input Reflected-Ripple Current: Peak-Peak		40	60	mAp-p	5HZ to 20MHZ, Vin=24V, Io= Io,max, 12uH source Impedance, Cin=690uF, Tb=25°C
Input Ripple Rejection		60		dB	120Hz
Input Under Voltage Protection: Turn-on Threshold Turn-off Threshold Hysteresis	 16 14 1.5	 17 15 2	 18 16 	V V V V	Vo=28V, Io =Io,max.

OUTPUT SPECIFICATIONS:

PARAMETER	MIN	TYP	MAX	UNITS	CONDITIONS
Output Set Point (Vo,set)	27.72	28	28.28	V	Tb=25degC,Vi=24V, Io=Io,max
Output Voltage Tolerance Band	-3		+3	%	All Operating Condition
Line Regulation			0.2	%	Vi=18V to 30V
Load Regulation			0.2	%	Io= Io,min to Io,max.
Temperature Drift			0.02	%/ degC	Tb= -40 to 100degC
Output Ripple and Noise Voltage Peak to Peak		150	350	mVp-p	Bandwidth 5Hz to 20MHz and with 0.1uF MLCC.Output Capacitor:
Output Current (Io,max)	0		21.5	A	At Vo<=28V, if Vo>28V, Output Power (Po) should be less than its rating power.
Output Current Limit	21.5	25	28.5	A	Current limit inception point Vo=90% of Vo,set,
Output Under Voltage Protection	11	12	13	V	Io=0.5A ,Hiccup mode
Output Over Voltage Protection	32	34	36	V	The module will latched unless either the input volt-age or on/off is cycled
Input Over Voltage Protection	34	35	36		Io=0.5A
External Capacitance	660		6000	uF	
Output Power			600	W	
Auxiliary Voltage	8	10	12	V	Io <= 50mA

OUTPUT SPECIFICATIONS (CONTINUED):

PARAMETER	MIN	TYP	MAX	UNITS	CONDITIONS
Efficiency		94.2		%	Vi=24V, Vo=28V, Io=50% of Io,max Tb=25 degC
Dynamic Response: Peak Deviation Settling Time		3	 500	 %Vo,set us	Vi=24V, Tb=25degC 25% - 50% -75% load, Δ Io/Δ t=0.1A/us; with Output Capacitor 660uF, Duration outside of Vo,set +/- 1.0% error band

CONTROL SPECIFICATIONS:

PARAMETER	MIN	TYP	MAX	UNITS	CONDITIONS
Logic ON/OFF On-State Voltage			 2.5	 V	External pull low Logic ON/OFF to turn on
Rise time		15	30	ms	Vo from 10% to 90% of Vo,set
Turn-On Time		35	50	ms	From Vin connection to Vo=90% of Vo,set
Remote ON/OFF Turn-On Time		30	45	ms	From ON/OFF trigger to Vo=90% of Vo,set
Output Voltage Trim Range	14		32	V	Refer to Trim Circuit.
Over Temperature Protection Shutdown Recovery	100	 105 95	115	 ^{o}C ^{o}C	Refer to Fig.5 for location definition Auto. Recovery

ISOLATION SPECIFICATIONS:

PARAMETER	MIN	TYP	MAX	UNITS	CONDITIONS
Input to Output		1500		Vdc	60 seconds
Input to Case		1500		Vdc	60 seconds
Output to Case		500		Vdc	60 seconds
Input to Output Capacitance		14		nF	
Isolation Resistance	100			Mohm	At Tb=25degC, 70%RH, Output to Baseplate 500VDC

STRUCTURAL DYNAMICS:

PARAMETER	CONDITIONS
Vibration	Sine Wave, 10-55Hz (Sweep for 1 min.), Amplitude 0.825mm Constant (Maximum 5g) X,Y,Z 1 Hour each, At No Operating,
Shock	20g, 166 in/sec, Square Wave

GENERAL SPECIFICATIONS:

PARAMETER	MIN	TYP	MAX	UNITS	CONDITIONS
MTBF		1.5		Mhrs	Tb=40degC,Vin=24V, Io=80% of Io,max
Weight		200		g	
Size (WxHxD)		4.59x2.4x0.5		in.^3	

TRIM CIRCUIT:

A. Output Voltage Adjusted by using external resistor and/or variable resistor:

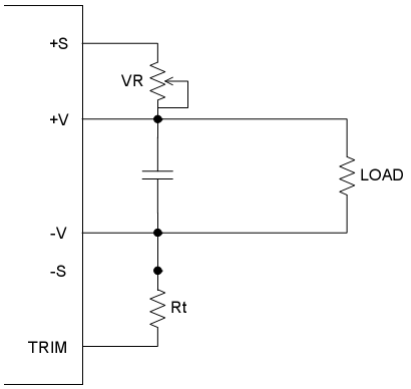

The output voltage can be determined by below equations:

$$V_f = \frac{1.225 * (R_t // 32.4))}{7.32 + (Rt // 32.4)} \quad \text{(V)}$$

$$V_{out} = (28 + VR) * V_f \quad \text{(V)}$$

Rt: +/-5% tolerance
VR: +/-20% tolerance
Unit: K ohm

Rt:43K ohm and VR:10K ohm for output +/-10% Variable.

Fig. 1 The schematic of output voltage adjusted by using external resistor and/or variable resistor.

B. Output Voltage Adjustment by Applying External DC Voltage:

The output voltage can be adjusted either by applying an external voltage or external resistor at the trim terminal. The relationship between the trim voltage and output voltage is shown in figure 2.

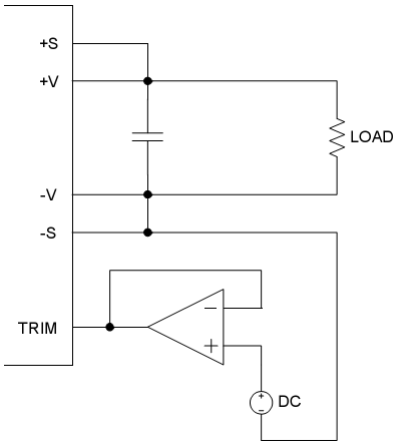

*Output Voltage = TRIM Terminal Voltage * Nominal Output Voltage*

Fig. 2 The schematic of output voltage adjusted by using external DC voltage.

For all other applications not defined above, the trim circuit of figure 3 may be used.

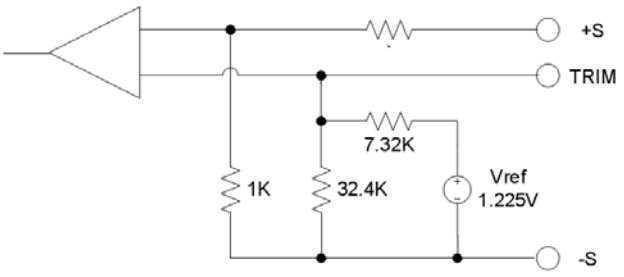

Fig. 3 Trim Circuit (for reference)

Recommended ON/OFF control Circuit :

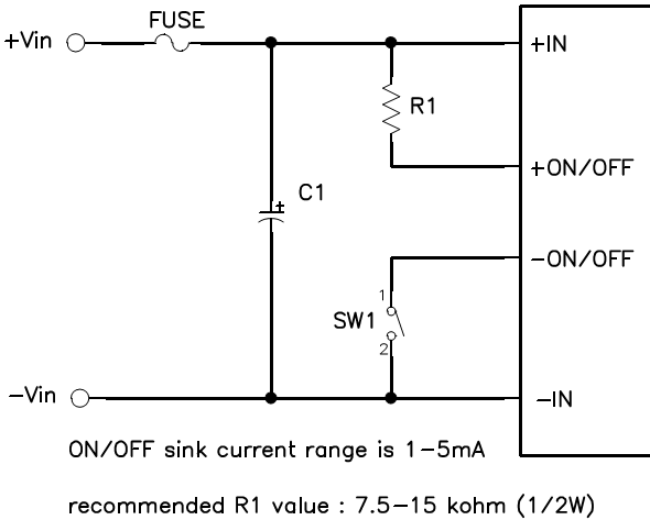

SW1 status	Output status
Open	Off
Short	On

Fig. 4 ON/OFF Control Circuit

BASEPLATE MEASURE POINT: UNIT: mm

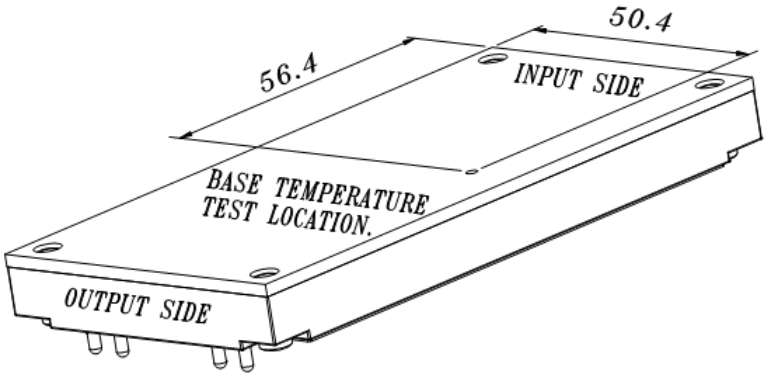

Fig. 5 Baseplate Temperature Measure Point.

EFFICIENCY CURVE:

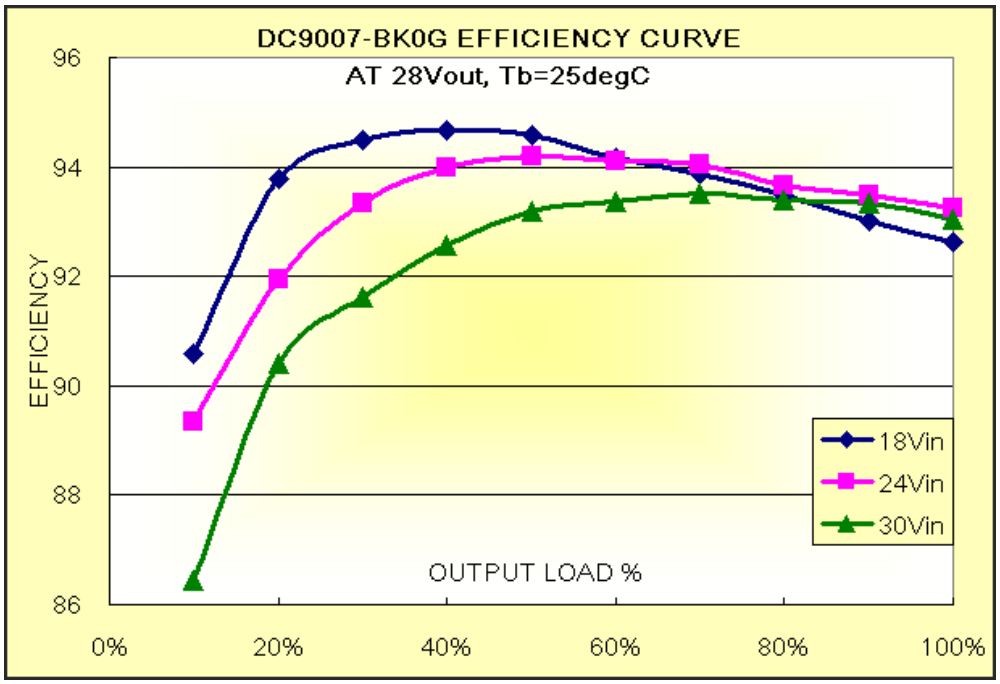

Fig. 6 Efficiency curve.

OUTLINE DRAWING:

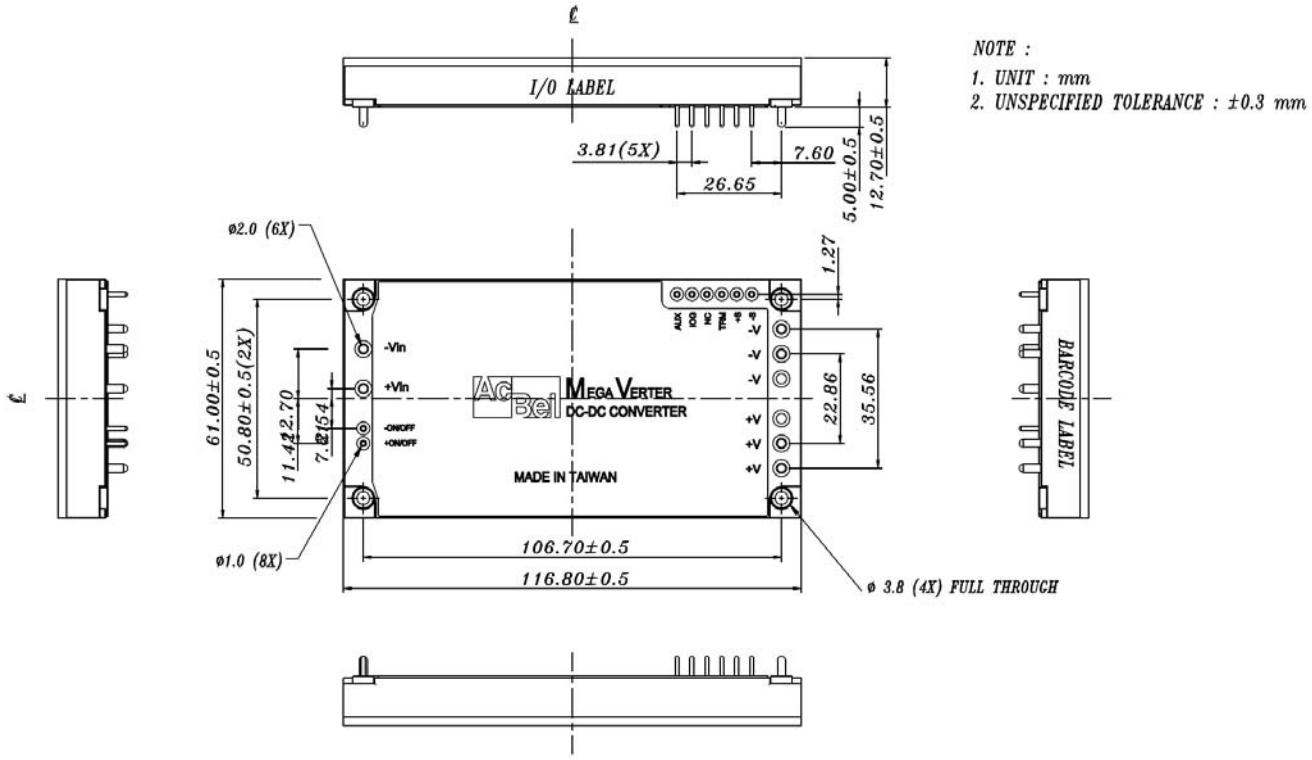

Fig. 7 Outline drawing.

EMI Suggestion Circuit:

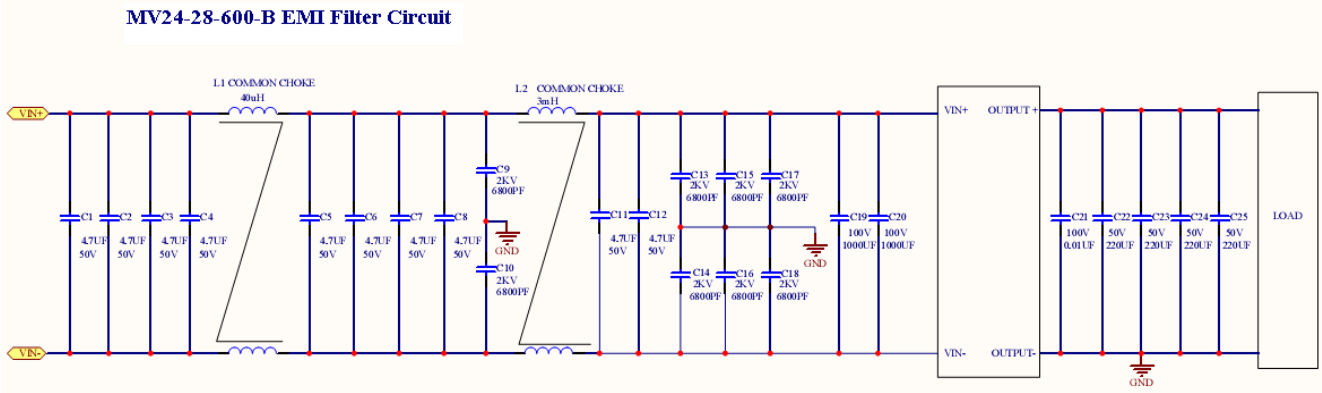

Fig. 8 EMI Suggestion circuit.